775nm Narrow Linewidth Laser Diodes(DIL Package)

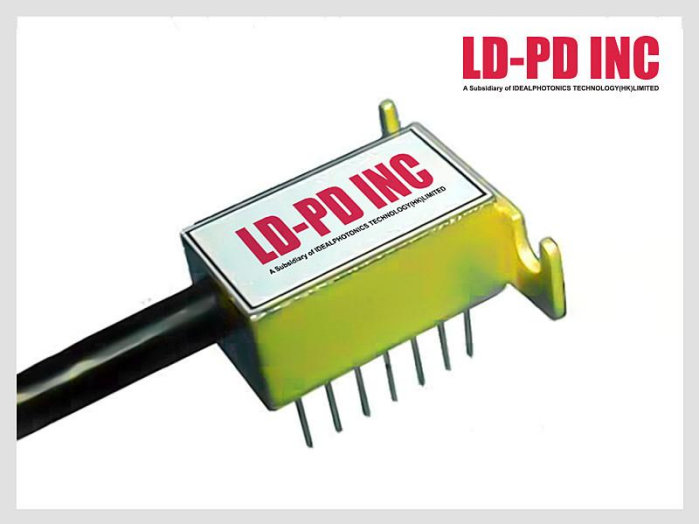

Description

The PL-NL series Fiber Bragg Grating laser is single frequency laser diode module designed for optical measurement and communication. The laser is packaged in 14-pin standard butterfly package with monitor photodiode and thermo-electric cooler (TEC)

Features

- Optical output: 20mW
- Narrow linewidth (Δv < 0.1MHz)
- Wavelength:775nm @ 25°C
- SM or PM Fiber (ø0.9mm)
- FC-APC connector
- 14-pin butterfly package
- Internal monitor PD and TEC
- Low power consumption

Application

- Laser interference experiment
- Optical Test and Instrumentation
- Sensors

E/O Characteristics)

Optical Characteristics (at 25 °C laser temperature)

Parameter	Symbol	Condition	Min.	Typical	Max.	Unit
Center Wavelength	λc	TL=15～35°C CW	770	775	780	nm
Peak Optical Output Power	PO	-	5	-	10	mW
Spectral linewidth	LW	-	-	1	10	MHZ
Relative Intensity Noise	RIN			-145		db/HZ
SMSR	SMSR	CW	40	50	-	dB
PER	ER	-	20	-	-	dB
Wavelength drift with case (-10 to 70 °C) temperature	△λ	TL=15～35°C	-	-	±1	pm
Wavelength Temperature coefficient	Δλ/ΔT	TL=15～35°C	-	100		pm/°C
Wavelength Current coefficient	Δλ/ΔI	-	-	1		pm/mA
Mode Hope free Range	ΔI			30		mA

Electrical Characteristics (at 25 °C laser temperature)

Parameter	Symbol	Condition	Min.	Typical	Max.	Unit
Threshold Current	ITH	-	-	40		mA
Operating current	Iop	CW	-	90	110	mA
TEC set temperature	Ts	-	15	-	35	°C
Laser Forward Voltage	VF	CW output power@5 mW	-	1.3	2.5	V
Monitor Dark Current	ID	Pf=5mw VRD=5V	-	-	0.1	μA
Thermistor Current	ITC	-	10	-	100	μA
Thermistor Resistance	RTH	TLD=25°C, B=3900±100K	9.5	10	10.5	KΩ
TEC Current	ITEC	IF=EOL, TC=70°C	-	-	1.2	A
TEC Voltage	VTEC	IF=EOL, TC=70°C	-	-	2.4	V

Spectrum

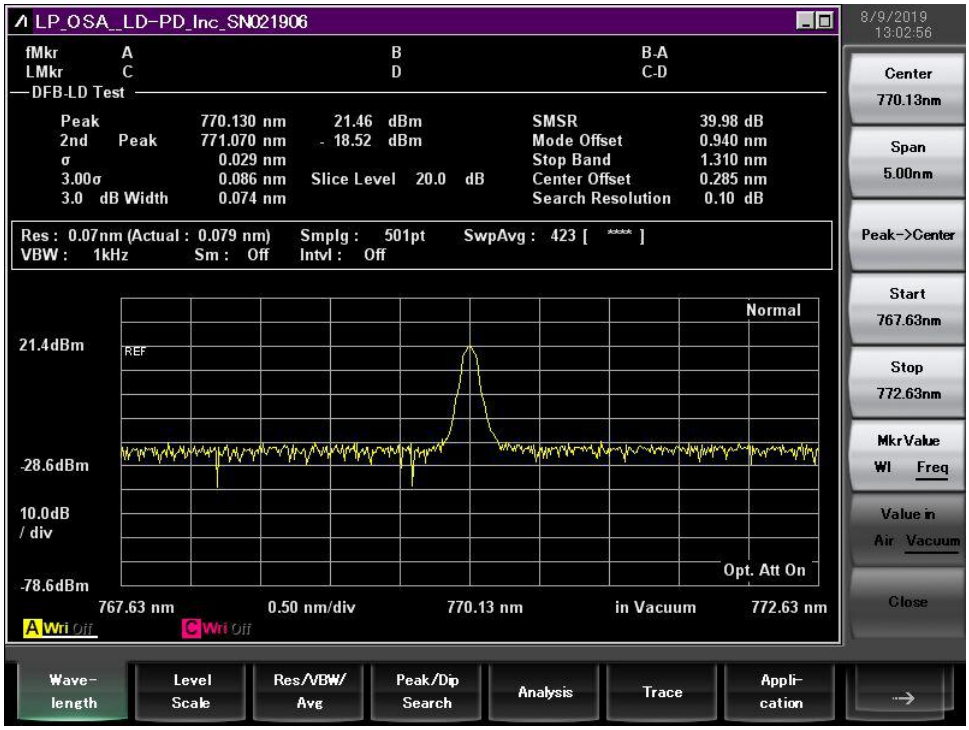

L-I Curve

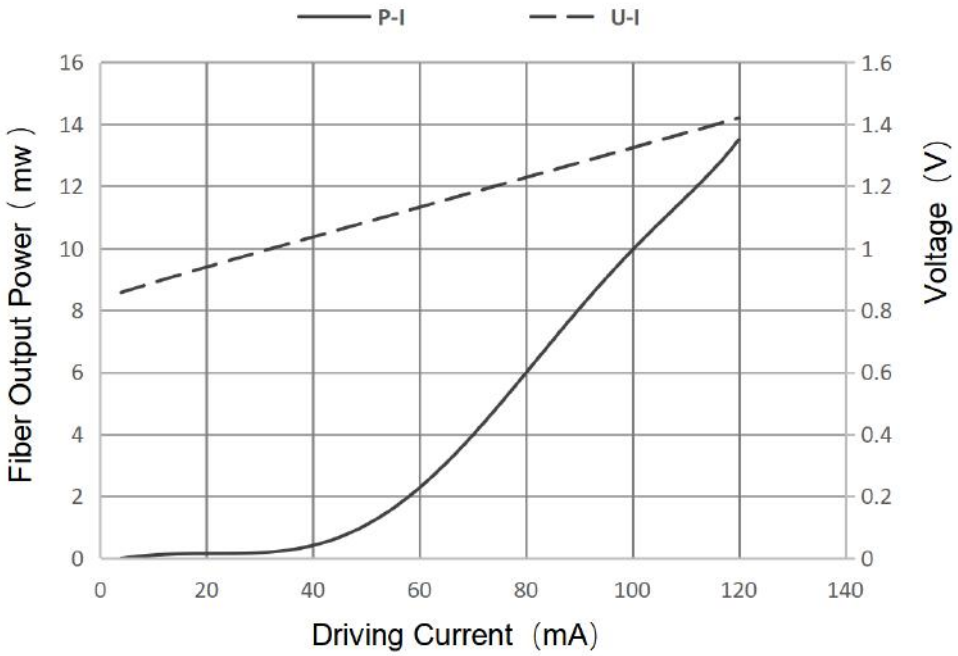

Beam Quality(M2,2D/3D Beam)

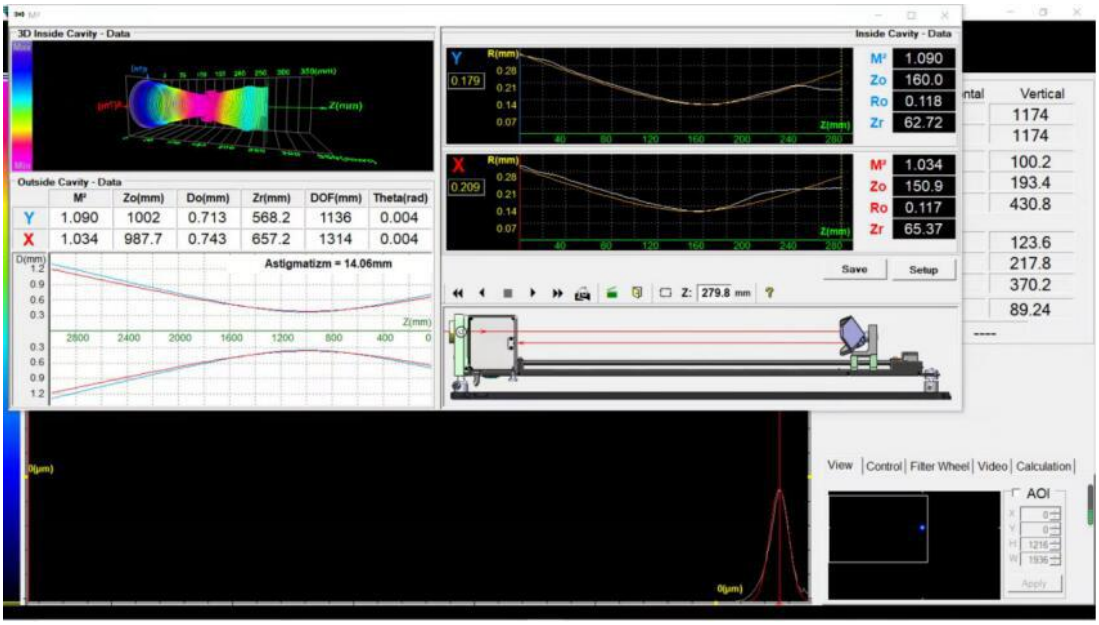

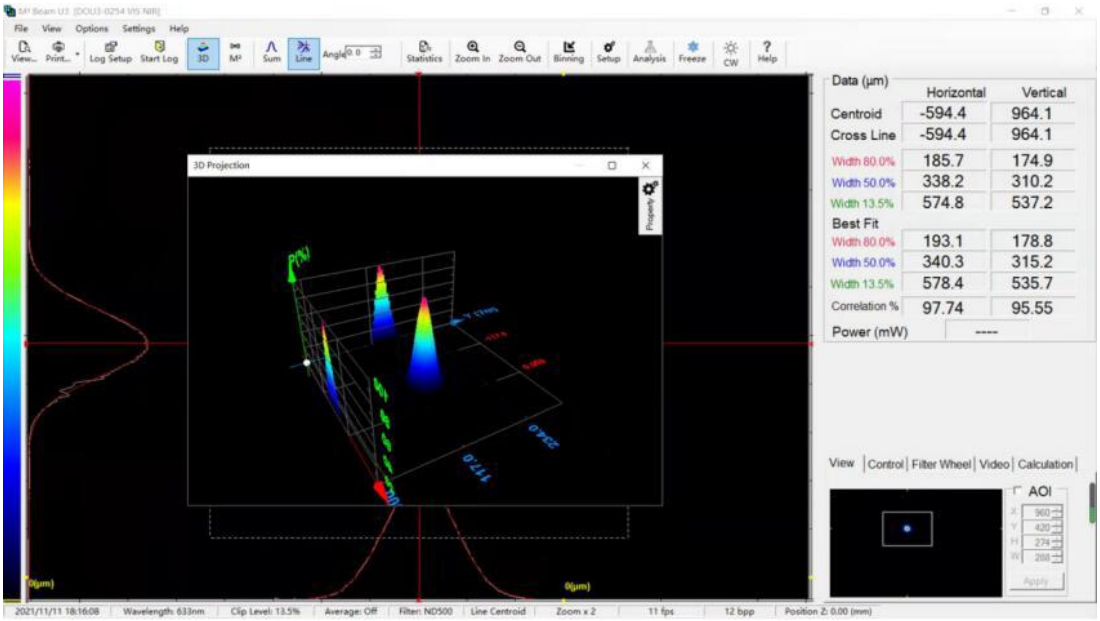

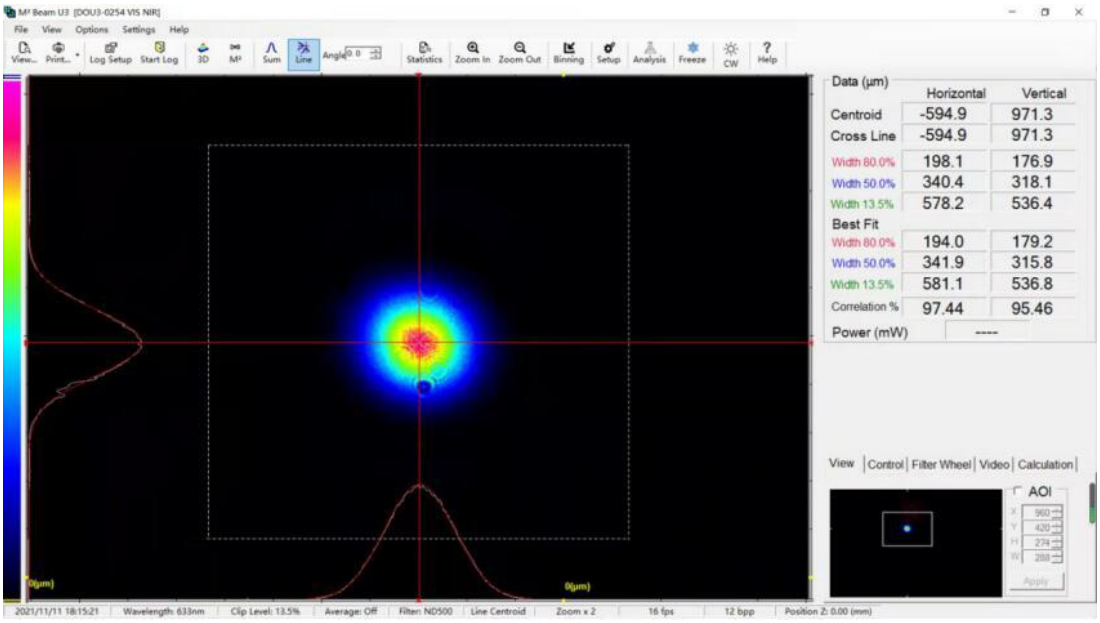

Fiber Pigtail Specifications

Parameters	Description
Fiber Type	HI780/PM780fiber
Jacket Type	900μm loose tube
Pigtail Length	1.0±0.1m
Connector Type	FC/APC
PM fiber Connector Orientation	Please see the right figure

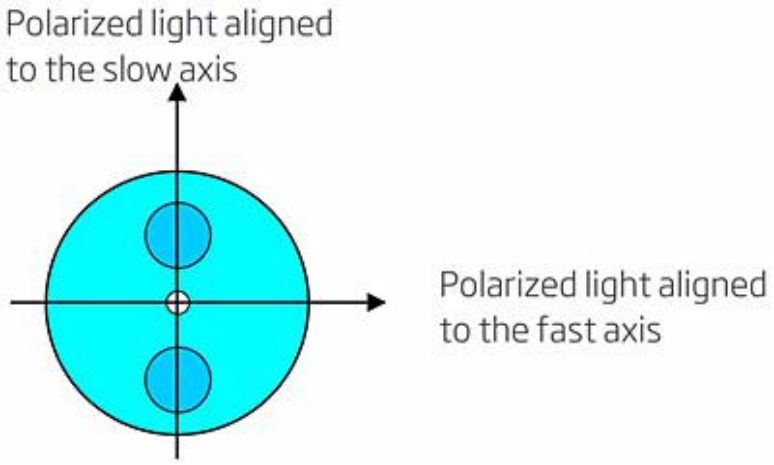

Note: The PM fiber and the connector key are aligned to the slow axis,fast axis is blocked

Package Size

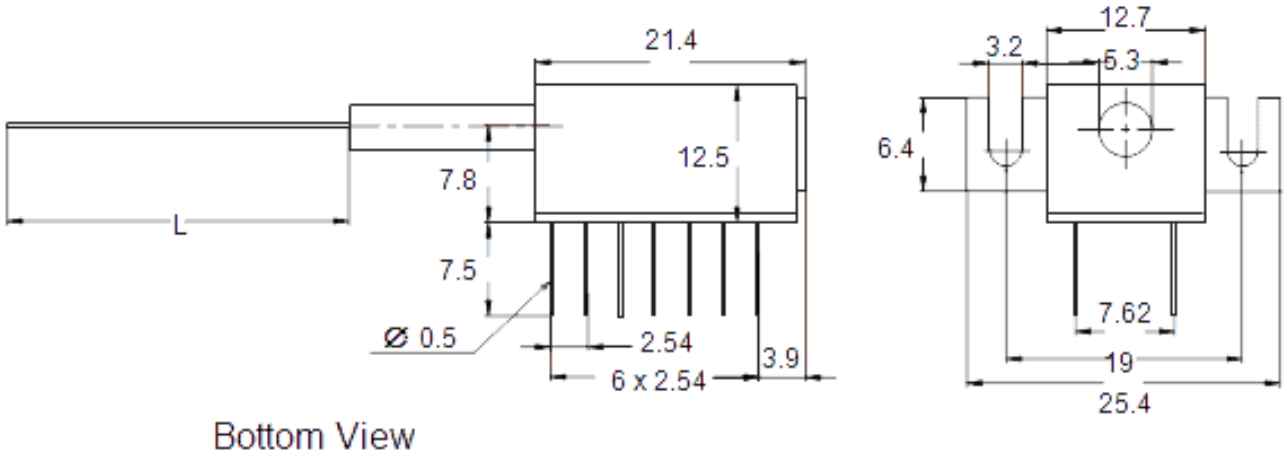

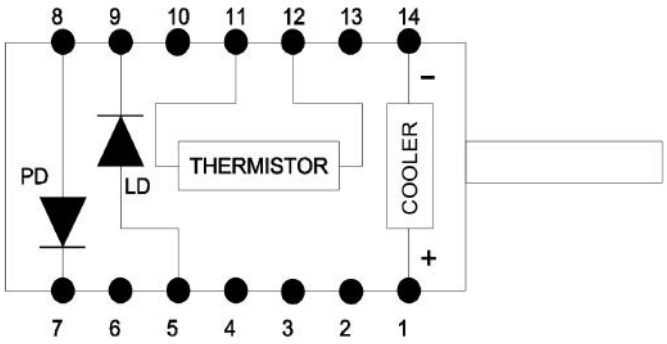

BOTTOM VIEW

1	Thermoelectric Cooler (+)	8	PD Anode (-)
2	N/C	9	LD Cathode (-)
3	N/C	10	N/C
4	N/C	11	Thermistor
5	LD Anode (+)	12	Thermistor
6	N/C	13	N/C
7	PD Cathode (+)	14	Thermoelectric Cooler (–)

Absolute Maximum Ratings

Item	Unit	Min	Typ	Max
Case Temperature	°C	-40	25	70
Chip Temperature	°C	+10	25	40
Operating Current	mA	0	90	110
Forward Voltage	V	0.8	1.2	1.8
TEC Current	A	-	1.2	1.4
Reverse Voltage(LD)	V	-	-	1.8

Ordering Info

PL-NL-□□□□-☆-A8▽-XX-☆

□□□□:Wavelength

0633:633nm

1550:1550nm

1555:1555nm

*****

1560:1560nm

☆ :Output Power

A:5mW

B:10mW

▽:Linewidth

1:＜1MHZ

XX: Fiber and Connector Type

SA=HI780+ FC/APC

SP=HI780+ FC/PC

PP=PM780 Fiber+ FC/PC

PA=PM780 Fiber+ FC/APC

☆-DIL