InGaAs PD Pigtailed Photodiodes

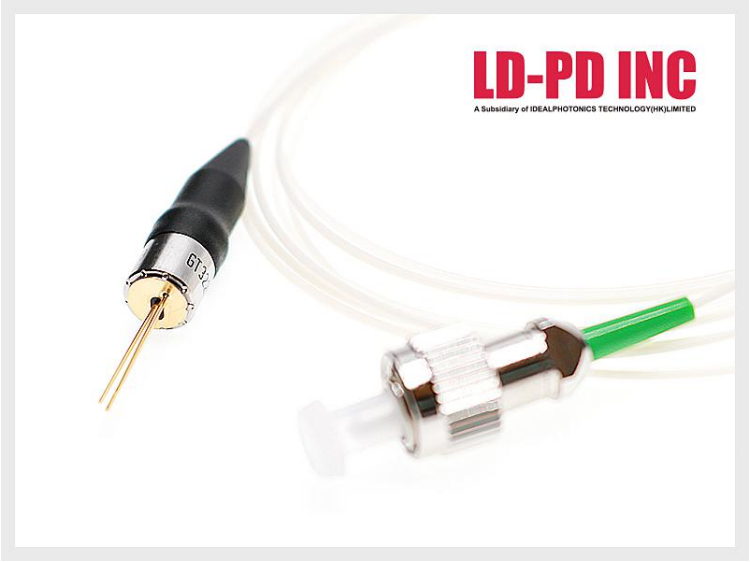

Description

The PL-1700-IG-AR0075-FSA is a 75um InGaAs PD housed in a hermetic 3 pin coaxial package. The InGaAS PD is coupled to a single mode fiber pigtail. The low noise, overload tolerant PD makes the devices ideal for OTDRs, line receivers and any other light level detection/ signal transmission application. Devices can be pigtailed with any size optical fiber that is compatible with its active area size. Pigtails range in core size from 3um to 100 micron. One meter is the standard length, but any length or connector termination may be specified. Pigtails may be terminated with ST, FC, SC and LC connectors with either PC or APC polish.

Features

- Top illumination planar PD
- Low Dark Current
- High Responsivity
- High Reliability

Application

- Optical
- communication
- CATV
- Optical fiber sensors
- High speed pulse detecting

E/O Characteristics

Electrical/Optical Characteristics (Tsub=25°C, CW bias unless stated otherwise)

Parameters	Sym.	Test conditions	Min	Typ	Max	Unit
Response Spectrum	λ	-				nm
Active diameter	ϕ	45/60/75/100				um
Responsivity	Re	Pin=10μw,λ=1.55μm,VR=5V	8.5	40	40	A/W
Max linear power	Φs	VR=5V,λ=1.55μm	5	100	100	mw
Reverse breakdown voltage	VBR	D=100mA, ϕe=0	45			V
Optical return loss	Vpt	λ=1.55μm,ϕe=100μw	30			dB
Optical insert loss	IRL	λ=1.55μm,ϕe=100μw			0.5	dB
Dark current	ID	VR=5V,Pin=0μw		0.5	1	nA
Capacitance3	C	VR=5V,f=1MHz	0.5	1.5	1.5	PF
-3dB bandwidth	BW	VR=5V,f0=100MHz,RL=50C	0.6	1.5	1.5	GHZ
Operating voltage temperature coefficient	δ	Tc=-40～+85°C		0.10	0.15	V/°C
Recommend Operating Voltage	VR	-	5	5	5	V

Response Curve

Relative Responsivity(X100%)

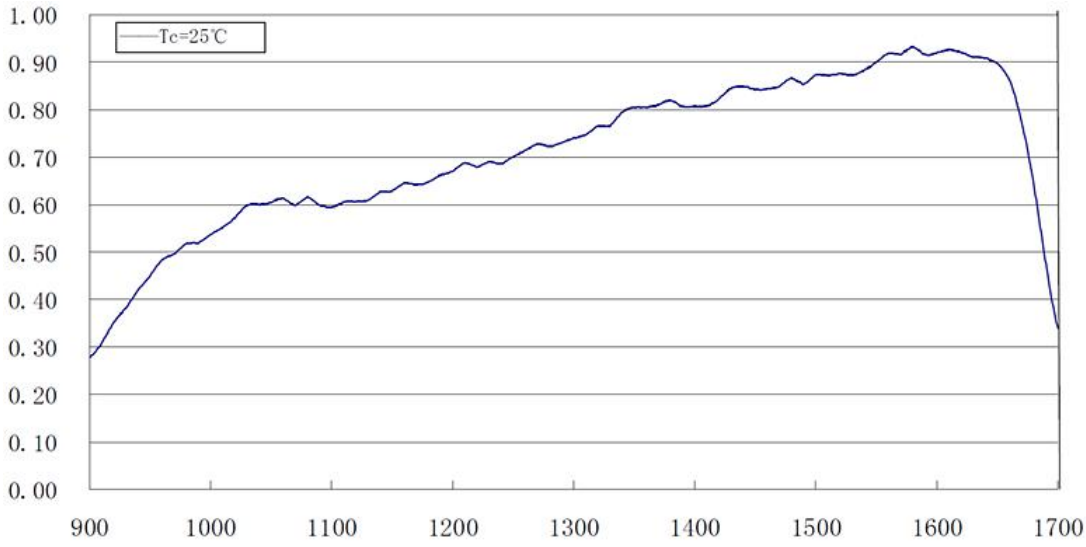

(Wavelength Unit:nm)

Application electric circuit

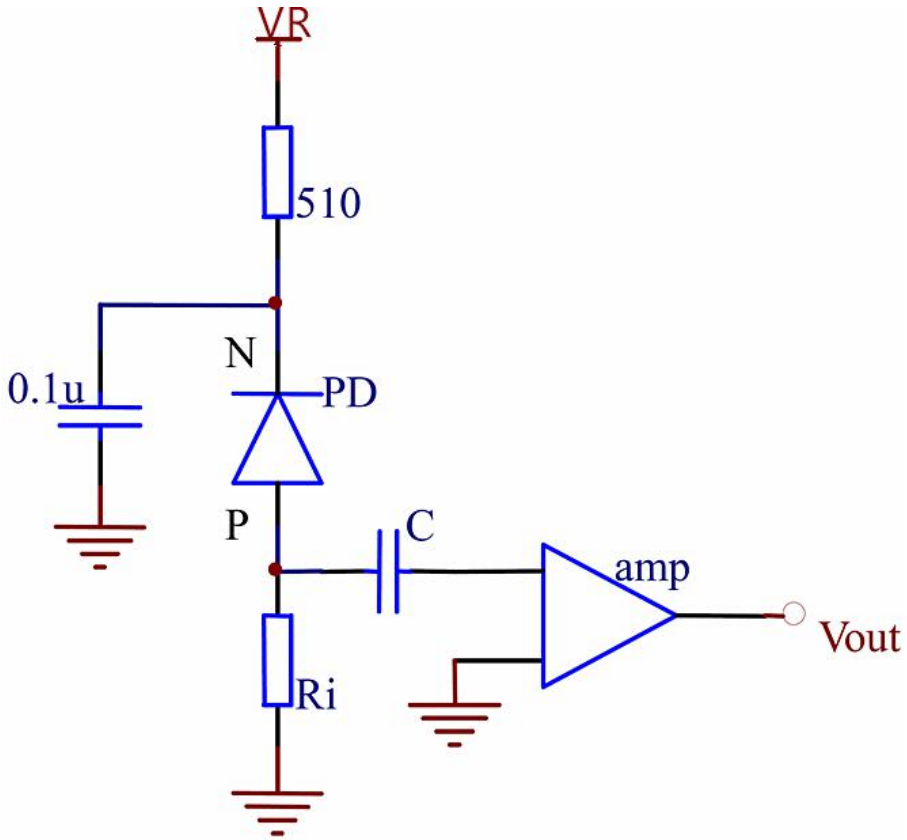

Dimensions and Pin definitions

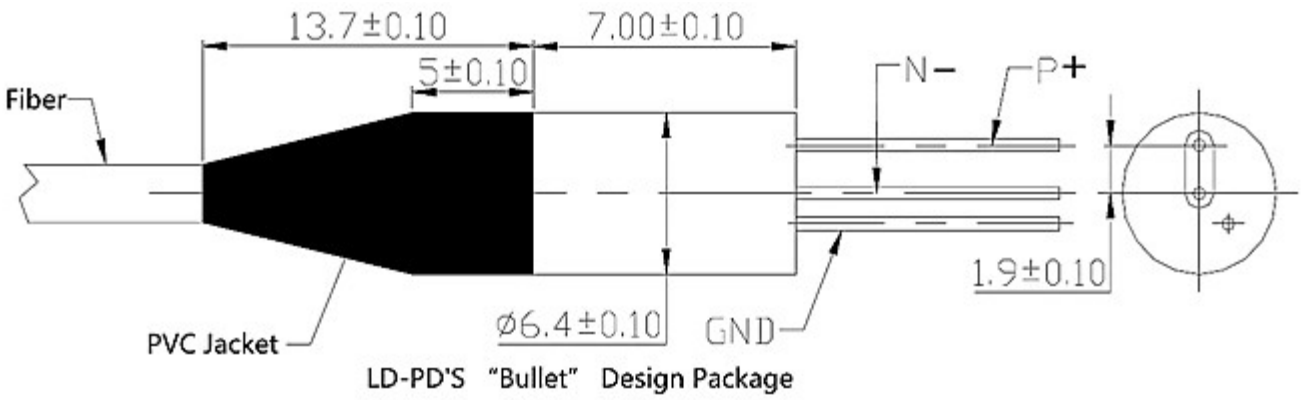

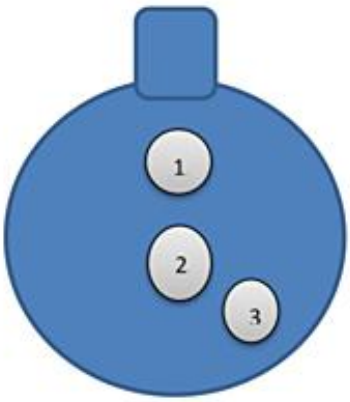

Bottom View

1	P +
2	N-
3	GND

SMF-28E Fiber Nominal Characteristics and Tolerances

Parameters	Specification
Cut off wavelength	920nm
Max Attenuation	2.1dB/km
Cladding Diameter	125um
Coating Diameter	250um
Core Cladding Concentricity	≤0.5um
Mode Field diameter	9.5um

Absolute Maximem Ratings

Item	Symbol	Unit	Min	Typ	Max	Testing Condition
Case Temperature	TOP	°C	-5	25 5	70	
Forward Voltage	VR	V	3	-	15	
Axial Pull Force		N	-	-	5N	
Side Pull Force		N	-	-	2.5N	3x10s
Fiber Bend Radius			16mm	-		-
Reverse Voltage(PD)	VPD	V	-	-	45	C=100pF,R=1.5KΩ, HBM
PD electrostatic Discharge	VESD-PD	V		-	500	
PD Forward Current	IPF	mA		-	10	
Power Consumption	P	mw		-	100	
Lead Soldering time		S		-	10s	260°C
Store Temperature	TSTG	°C	-40		+85	2000hr
Operating Temperature	TOP	°C	-55		+125	
Relative Humidity	RH		5%		95%	Noncondensing

Ordering Info

PL-□□□□-☆-AR▽-XX

□□□□: Cut off Wavelength

400: 400nm

900: 900nm

1700: 1700nm

2100: 2100nm

2400: 2400nm

2700: 2700nm

☆ :Material

IG: InGaAs PD

Si: Si

▽: Active Area

45: 45um

60: 60um

75: 75um

….

100: 100um

XX: Package/Fiber and Connector Type

TO: TO46 Package

FSA=SMF-28E Fiber coupled+ FC/APC

FSP=SMF-28E Fiber coupled + FC/PC

FPP=PM Fiber Fiber coupled + FC/PC

FPA=PM Fiber Fiber coupled + FC/APC

User Safety

Safety and Operating Considerations

This device operates under reverse bias voltage, and the polarity of the device can’t be reversed.

Operating the Photodiode outside of its maximum ratings may cause device failure or a safety hazard. Power supplies used with this component cannot exceed maximum peak optical power.

ESD PROTECTION—Electrostatic discharge (ESD) is the primary cause of unexpected laser diode failure. Take extreme precaution to prevent ESD. Use wrist straps, grounded work surfaces, and rigorous antistatic techniques when handling Photodiodes.